VESTEL
MOBILITY

Data sheet

AC Gemini Dual 7/22/44

AC Gemini Dual is the perfect solution for private and semi-public applications.

Double socket in a compact enclosure, AC Gemini Dual simplifies cluster installations for mass charging requirement.

© Copyright 2024 VESTEL Company. All rights reserved.
Passing on and copying of this document, use and communication of its contents not permitted without written permission from VESTEL.

vestelmobility.com

Highlights

- Up to 22 kW AC charging per charging socket
- Local and remote load management
- RFID activation already included in
- High Secure Data Communication
- 7" Display
- Online via cellular, Wi-Fi or ethernet

Data sheet | AC Gemini Dual

Highlights

Fit your semi-public/ public applications

AC Gemini Dual is suitable for semi-public environmen such as works, supermarket or hotels. It supports simultaneous charging with two socket in one case. AC Gemini Dual's case is designed for cutting edge charging experience with its easy use.

Large and usefull area for your own branding

AC Gemini Dual provides flexible customization choises with IML technology. It can be ordered with full corporate design which will be visible for everyone.

Load Management Functions

AC Gemini Dual is suitable for your multiple installation cases with load management functions which allows to prevent grid overload.

Highlights

General information

Charging mode	AC, mode 3
Number of charging points	2
Charging connector	AC Type-2 Socket or tethered cable
Cable length	5 or 7 meters
IT backend connection	OCPP 1.6 JSON
Package dimensions (HxWxD)	540x640x315 mm

Mechanical details

Mounting type	Wall or pole mounted
Enclosure material	PC Plastic (5VA flame retardant)
Dimensions (HxWxD)	425 x 600 x 238 mm
Weight	14 kg

Electrical data

Max. charging output per charge point	AC15 : 1x7.4 kW or 2x7.4 kW AC22 : 1x22 kW or 2x11 kW AC44 : 1x22 kW or 2x22 Kw
Input: Nominal voltage, number of phases	1-P; 230 Vac ±10%, 50/60 Hz 3-P; 400 Vac±10%, 50/60 Hz
Output: Voltage	230-400V
Output: Current	10-13-16-20-25-30-32A
Stand-by power consumption	< 15W
Earthing system	3L+N+PE (TN, TT)
IEC Protection class	Class I
DC Residual Current Sense	2 x 6 mA
Built-in RCCB	2 x Type-A High Immunity (AC15 and AC22 versions) RCBO (AC44 version)
Built-in MCB	2 x MCB (AC15 version) RCBO (AC44 version)
Internal Protection	Over Current, Over Voltage, Under Voltage, DC/AC Residual Current, Over Temperature, Short Circuit, Socket Interlock, Surge/Lightning, Earth Fault, Phase- Neutral Reverse Detection
Tamper Switch	Available

Data sheet | AC Gemini Dual

Highlights

Connectivity

Communication interface	Wi-Fi and Ethernet (Default) Cellular (2G/3G/4G) Option
Protocols for communication with IT backend	OCPP 1.6 JSON
Communication with third-party devices	Modbus TCP/IP
Authentication methods	Free mode, ISO15118-2 Plug&Charge, RFID, OCPP
User Interface	Web Configuration user interface
Display	7”
Built-in MID Meter (Optional)	Accuracy Class B (% 1) Eichrecht approved

Certification

IP protection class	IP 54
Impact resistance	IK 10
Approvals	CE, RoHS, REACH, GPSD, WEEE
Cyber Security	Complying with the Electric Vehicles (Smart Charge Points) Regulations 2021
Standards	IEC 61851-1/22/, IEC 60950-1/22, IEC TS-62763,

Environmental conditions

Environmental operating temperature	-25˚C to + 50 ˚C
Humidity	5 % - 95 % (Rel. humidity, non-cond.)
Cooling	NA
Areas of use	Internal & External areas
Operating altitude above sea level	0 - 2000 m

Highlights

Product versions

MODEL DESCRIPTION : EVC010AC****-*

EVC10 : Electric Vehicle AC Charger (Mechanical Cabinet 10)

1st Asterisk (*) : Rated Power

22 : 11 kW (3Phase Supply Equipment)

2nd Asterisk (*) can include combinations of the following communication module options. RFID reader is standard equipment for all of the model variants. “S” option must be included for selecting combinations of W, L and P:

Blank : No connectivity module except RFID reader

S : Smart Board with Ethernet Port

W : Wi-Fi module or WiFi & Bluetooth module

L : LTE / 3G / 2G module

3rd Asterisk (*) can be one of the following:

D : 7” TFT color display

4th Asterisk (*) can be one of the following:

A : Charging unit with Type-A RCCB

MID : Charging unit with MID meter.

PEN : Broken PEN detection and disconnection function

EICH : Charging Unit with Eichrecht Conformity (From November 2023)

5th Asterisk (*) can be one of the following:

Blank : Case-B Connection with normal socket

T2S : Case-B Connection with shuttered socket

T2P : Case C Connection with Type-2 plug

T1P : Case C Connection with Type-1 plug

Data sheet | AC Gemini Dual

Highlights

Technical drawing

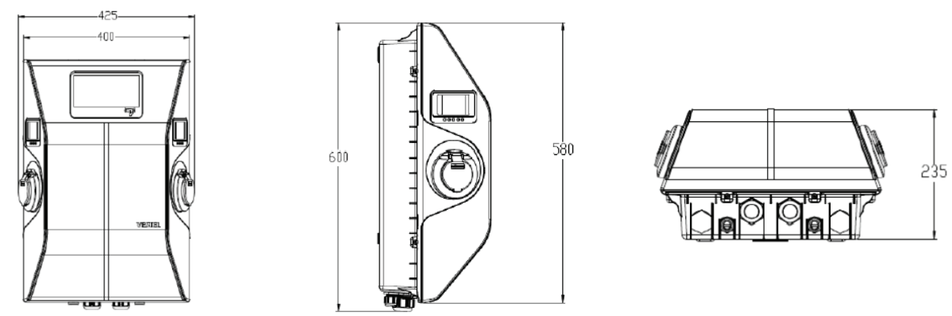

Additional accessories

AC Gemini Dual
Metal stand
Power Optimizer for Dynamic Load Management
Current Transformers for Dynamic Load Management

Notes